BUILD GUIDE AND HOW IT WORKS

Harmonic Drive

A strain wave gear, 1:50. Five printed parts and two 608 bearings.



Turn the crank fifty times and the output turns once, the other way. The cup in the middle has 100 teeth and bends into an oval every half turn; the ring round it has 102. This book explains why that gives 1:50, how the teeth of this model were made, and how to print and build it.

Ratio	**1:50**, output turns the other way
Teeth	100 on the cup, 102 on the ring, module 1
Size	132 × 132 mm, about 13 cm deep
Filament	about 241 g of PLA or PETG
Bought	2 × 608 bearings (8 × 22 × 7 mm)

What a harmonic drive is

A harmonic drive, or strain wave gear, gets a big reduction out of three parts that sit one inside the other. It was patented by C. Walton Musser in the late 1950s. Because so many teeth are in mesh at once it carries a lot for its size, and it can be made with almost no play, which is why it is in the joints of most industrial robot arms, in camera and antenna drives and in the wheel drives of the Apollo Lunar Roving Vehicle.

The three parts

Circular spline (the ring, grey): a rigid ring with 102 teeth on the inside. Here it is part of the housing and stands still.

Flexspline (the cup, orange): a thin cup with 100 teeth round the outside of its open end. Its bottom is the output: it carries the knob at the back.

Wave generator (blue): anything that pushes the open end of the cup into an oval. In industrial drives it is an elliptical cam with a thin, flexible ball bearing round it; here it is the crank bar with a 608 bearing at each end.

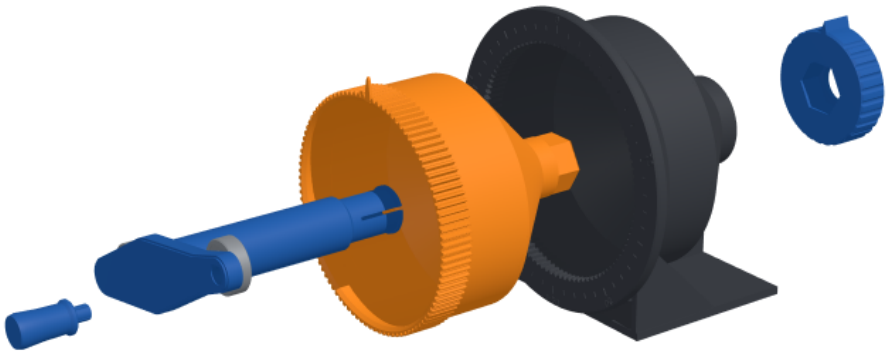

From the front: handle, wave generator with its two bearings, flexspline, housing with the circular spline, output knob.

How it works

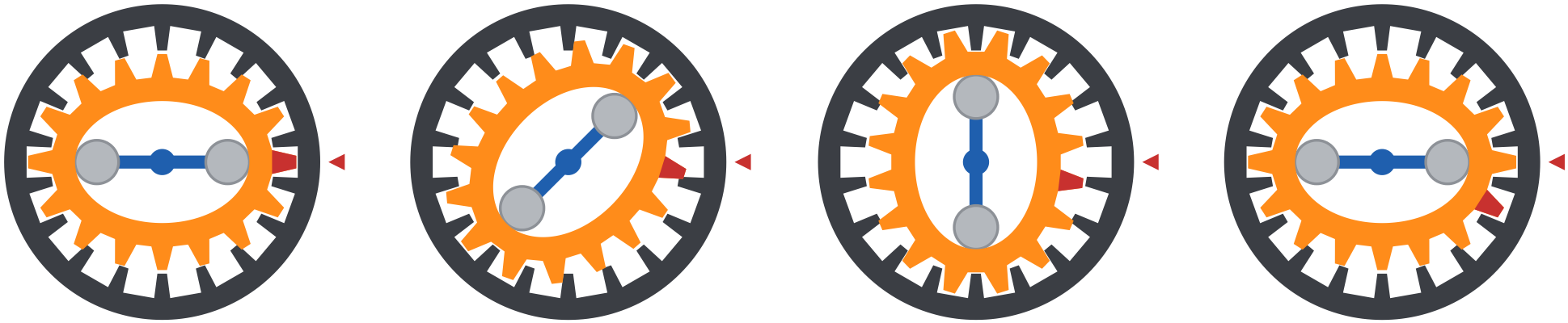

Drawn with 16 and 18 teeth and the oval much stronger than it is, so you can see it. The red tooth is one tooth of the cup; the red arrow is fixed to the ring.

The bearings push the cup out at the two ends of the bar. Only there do its teeth go all the way into the teeth of the ring; a quarter turn away the cup is pulled in and its teeth are free. Turn the bar and the two places where the teeth mesh go round with it: a wave of bending that runs round the cup, which is where the name comes from.

The cup itself hardly turns. Each time a meshing place passes, every tooth of the cup has to drop into the next free space of the ring, and because the ring has more teeth, that space is always a little further back. After the bar has gone round once, the cup has fallen back by the difference in teeth: here, two.

The maths of 1:50

The cup has $N_f = 100$ teeth, the ring $N_c = 102$. With the ring fixed, one turn of the wave generator moves the cup back by $N_c - N_f = 2$ teeth, which is 2/100 of a turn:

$$\text{ratio} = N_f / (N_c - N_f) = 100 / 2 = 50$$

The minus sign that goes with it means the cup turns the opposite way to the crank. One crank turn is 360° / 50 = 7.2° at the output: two teeth of the cup, or one tick on the dial. That is why the dial has 50 ticks and the pointer on the cup moves one tick per turn.

Why two teeth

The difference in teeth has to equal the number of places where the teeth mesh, so that the cup meets the ring the same way at both ends of the oval. An oval has two, so the difference is 2. A three-lobed generator would need a difference of 3 (and give 100/3 with these teeth).

If something else is held

Fixed	Input	Output	Ratio
ring	generator	cup	50, reversed (this model)
cup	generator	ring	$N_c/(N_c - N_f) = 51$, same way

How big the oval is

The teeth have module m = 1, so the cup's pitch circle is 100 mm across and the ring's 102 mm. To mesh fully at the long axis, the cup has to reach the ring's pitch circle there: it is pushed out by half the difference, (102 − 100) / 2 = 1 mm on each side. That is the deflection $w_0 = m$.

A thin ring pushed out at two points takes an oval that is almost exactly a pure two-lobed wave: it moves out 1.00 mm at the bearings and in 0.92 mm halfway between them. The ring does not stretch, it only bends, so every point of it also slides a little sideways and every tooth tilts as the wave passes.

Why a cup

The bottom of the cup stays round and turns in the back of the housing; the open end bends into the oval. The tube between them tilts a little, so the front of the teeth is pushed out further (1.14 mm) than the back (0.86 mm). The longer the tube, the smaller that difference: this one is 30 mm.

How the teeth of this model were made

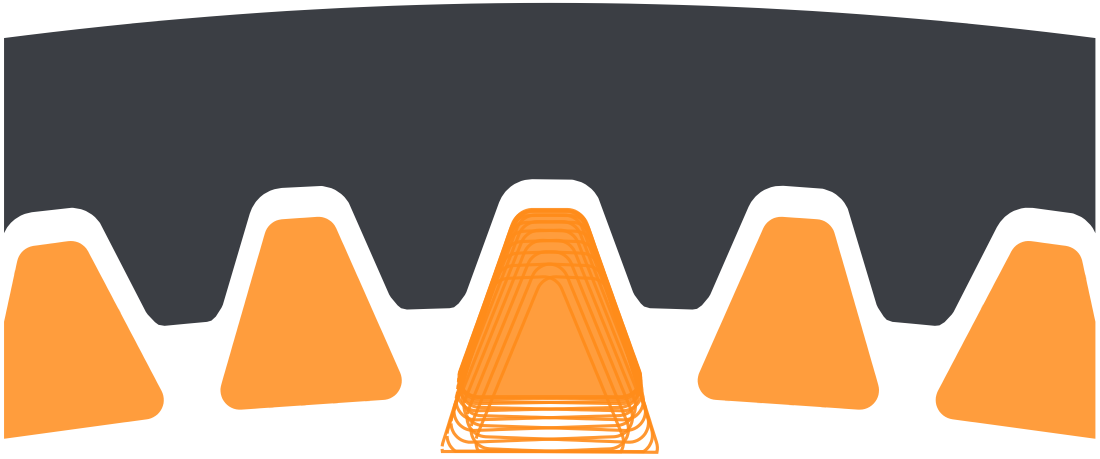

Real size, magnified: the ring (grey) and the cup's teeth (orange) at the long axis of the oval. The thin lines are the positions one tooth of the cup goes through as the oval passes.

The cup's teeth are simple: straight 20° flanks, 1.8 mm high, 0.79 mm across the tip so a 0.4 mm nozzle can print them.

The ring's teeth are not drawn by hand. A program moves one tooth of the cup through every position it takes as the oval passes, with the cup bent the way the bearings bend it, sliding sideways and tilting as above, at the front, middle and back of the teeth. Every one of those positions, grown by 0.2 mm, is cut out of the ring. What is left are the ring's teeth: the largest teeth that the cup's teeth can never touch.

A second program then turns the whole gear through its cycle and checks every tooth against the ring:

Closest a tooth comes to the ring	0.25 mm
Depth of mesh at the long axis	1.25 mm
Room at the short axis	0.72 mm
Backlash at the output	about 0.6° (30° at the crank)
Teeth carrying load	about a quarter of them
Bending strain in the rim	0.18% (PLA takes 0.35% for millions of bends)
Force on each bearing	about 4 N

Inside

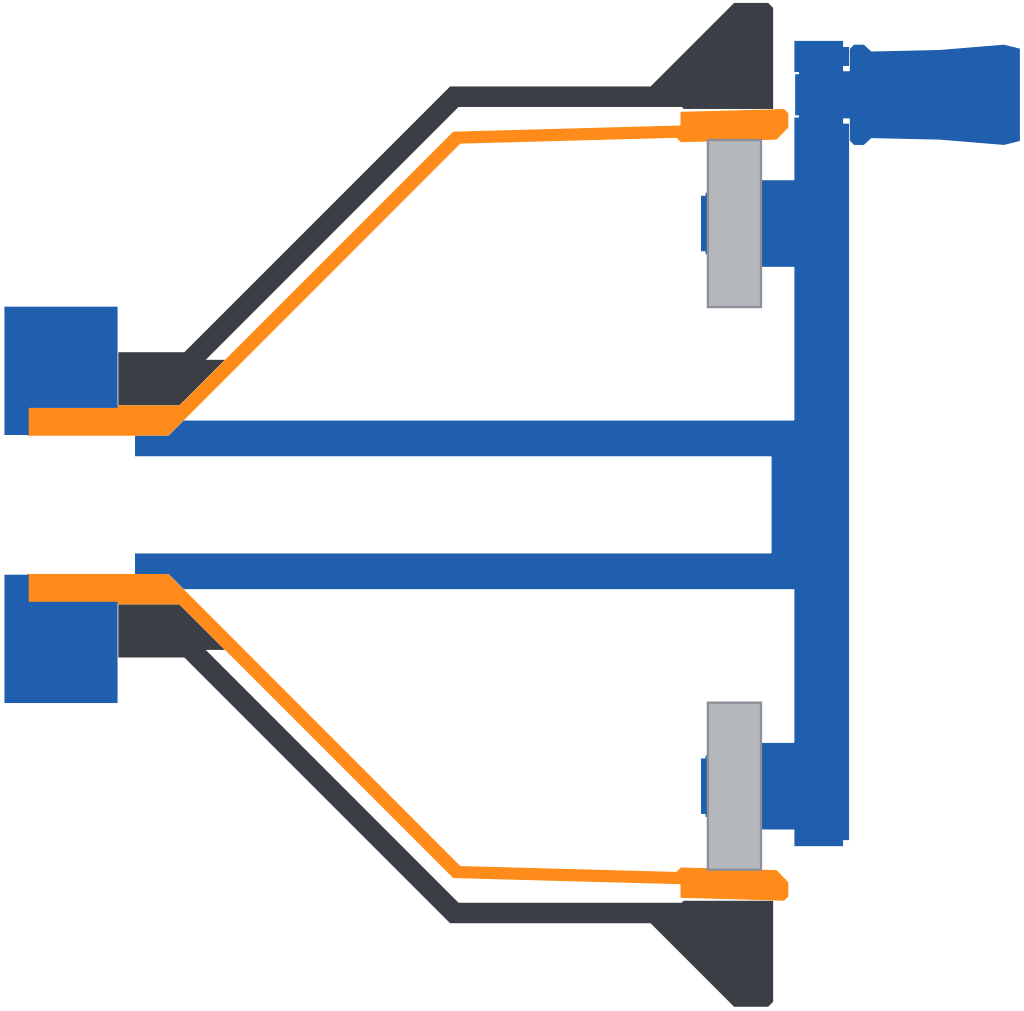

Cut along the axis through both bearings: back of the housing on the left, crank on the right.

The drive goes in at the front. The crank bar carries the two bearings inside the cup's rim, 1 mm behind the front of the cup. Its long shaft runs back through the cup to the hub, where it turns in a 18.4 mm bore.

The output comes out at the back. The cup's 45° cone ends in a hub that turns in the housing; on its hex sits the knob. The cone also rests on a matching cone in the housing, which takes the push when you press on the crank.

One snap holds it together. The end of the generator's shaft is split into four prongs with a lip. They spring out behind the knob, so the generator, the cup and the knob are held in one stack, and that stack is held in the housing between the cone and the knob, with 0.3 mm of room at each stop.

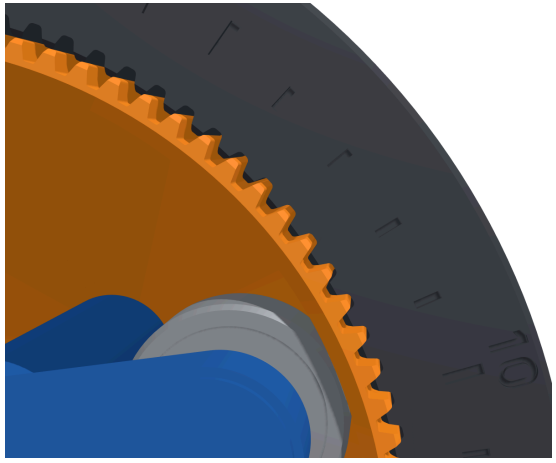

At the bearing the cup's teeth are deep in the ring; further round they come free.

Parts and printing



Housing ≈ 139 g

Standing on its back, as saved. No supports: every face that looks down is a 45° cone. The dial is engraved in the top face.



Flexspline ≈ 55 g

Open end down, as saved. No supports. Use a brim: it is 100 mm tall on a thin ring. PLA or PETG, not TPU.



Wave generator and crank ≈ 30 g

Front of the bar on the bed, shaft up. No supports. If the gear turns stiffly, print generator-easy instead: its bearings sit 0.15 mm further in.



Handle ≈ 2 g

Standing on the grip, peg up.



Output knob ≈ 15 g

On its back, as saved.

Print settings

Nozzle	0.4 mm
Layer height	0.20 mm
Walls	3
Infill	15%
Material	PLA or PETG (PETG for a flexspline that lasts)
Supports	none

You buy

2 × 608 bearings, 8 × 22 × 7 mm: the bearings in skateboard and inline skate wheels. Optional: a little grease or silicone spray for the teeth and the shaft.

Before you build

Check the first layer of the flexspline: the teeth must be separate. The open end has a small chamfer against elephant's foot. Scrape off any stringing between the teeth of the ring with a knife; the ring's teeth are 0.93 mm wide at the tip and need nothing else.

All 241 g together. The housing is the longest print.

Assembly

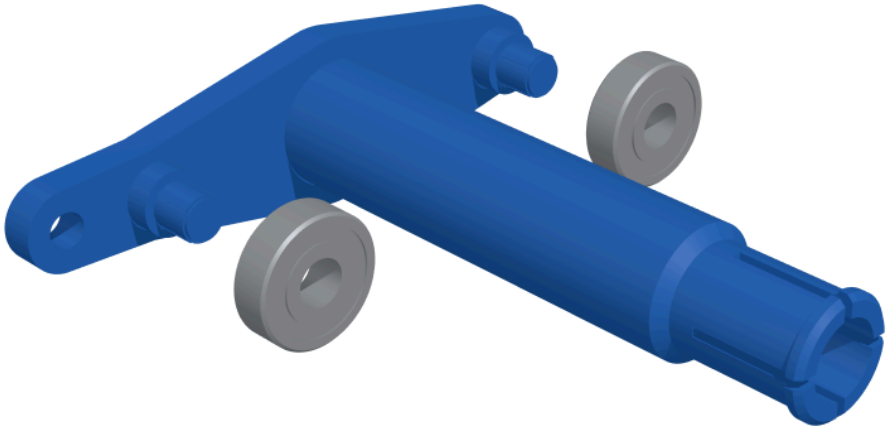

1 Bearings on the generator

Press a 608 bearing onto each peg from the back until it sits on the spacer. Four ribs on each peg hold it. Push on the inner ring of the bearing; a vice with two pieces of wood makes it easy.

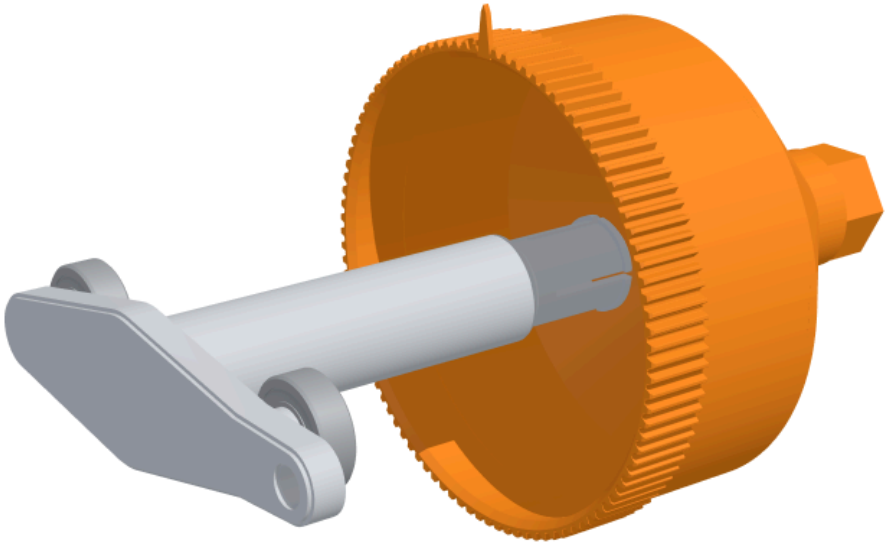

2 Generator into the cup

Push the generator into the open end of the flexspline, bearings first, with its shaft through the hub. The lead-in inside the rim lets the bearings push the rim out: the cup turns oval. Push until the four prongs click out behind the hub.

Assembly

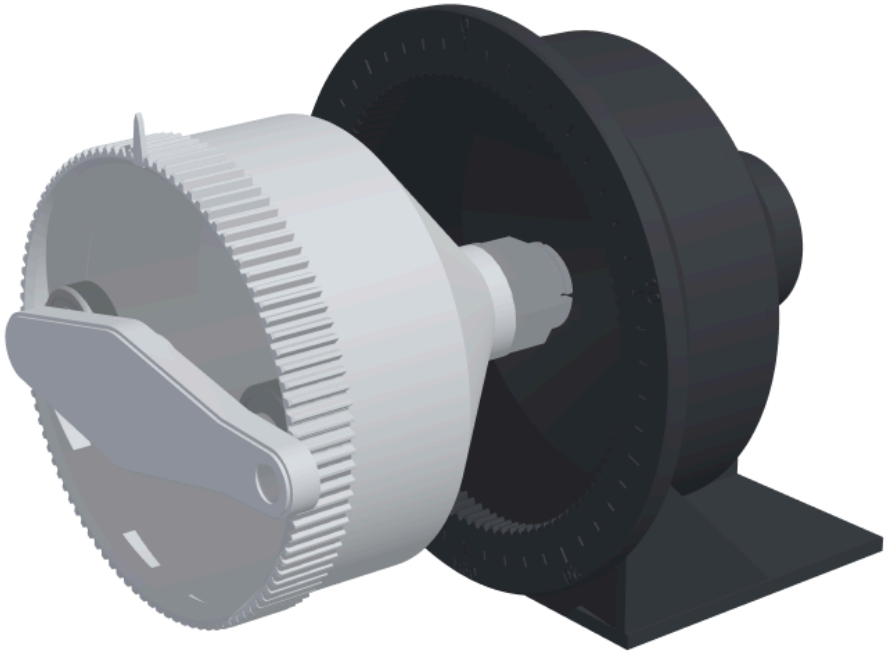

3 Cup into the housing

Push the cup, with the generator in it, into the housing from the front, hub first. When the teeth reach the ring, turn the crank a little to and fro while you push: the teeth at the two ends of the bar find their spaces and the cup slides in until its cone rests in the housing.

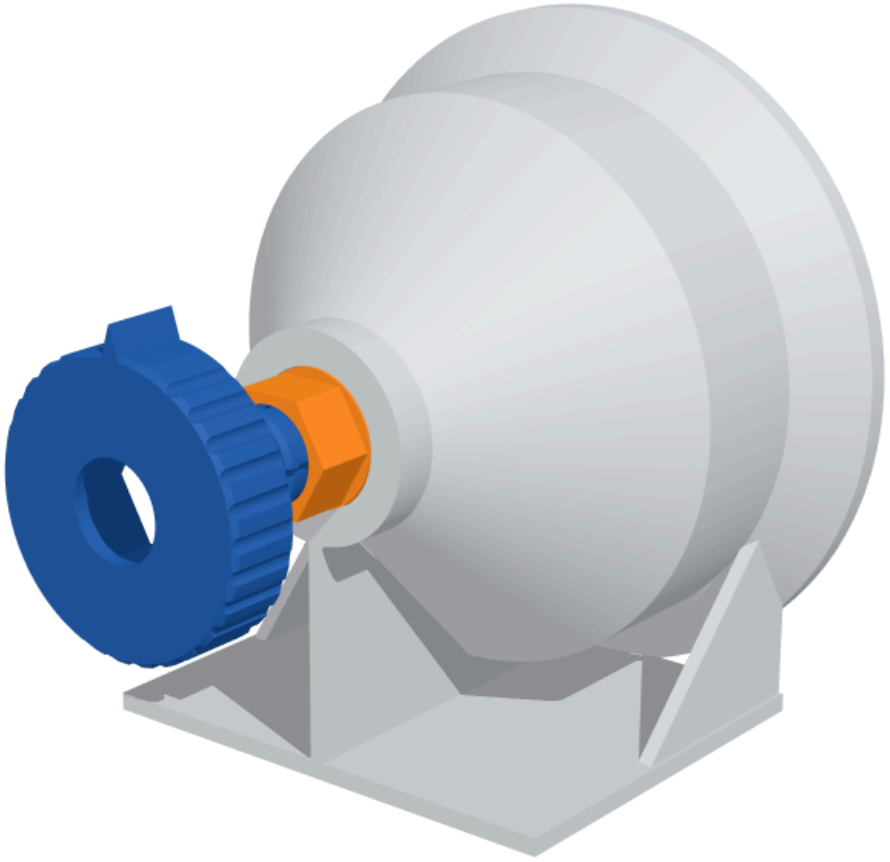

4 Knob

At the back, push the knob onto the hex of the hub. The prongs squeeze through the hole in the knob and click out behind it. To take the drive apart, squeeze the prongs together and pull the knob off.

Assembly

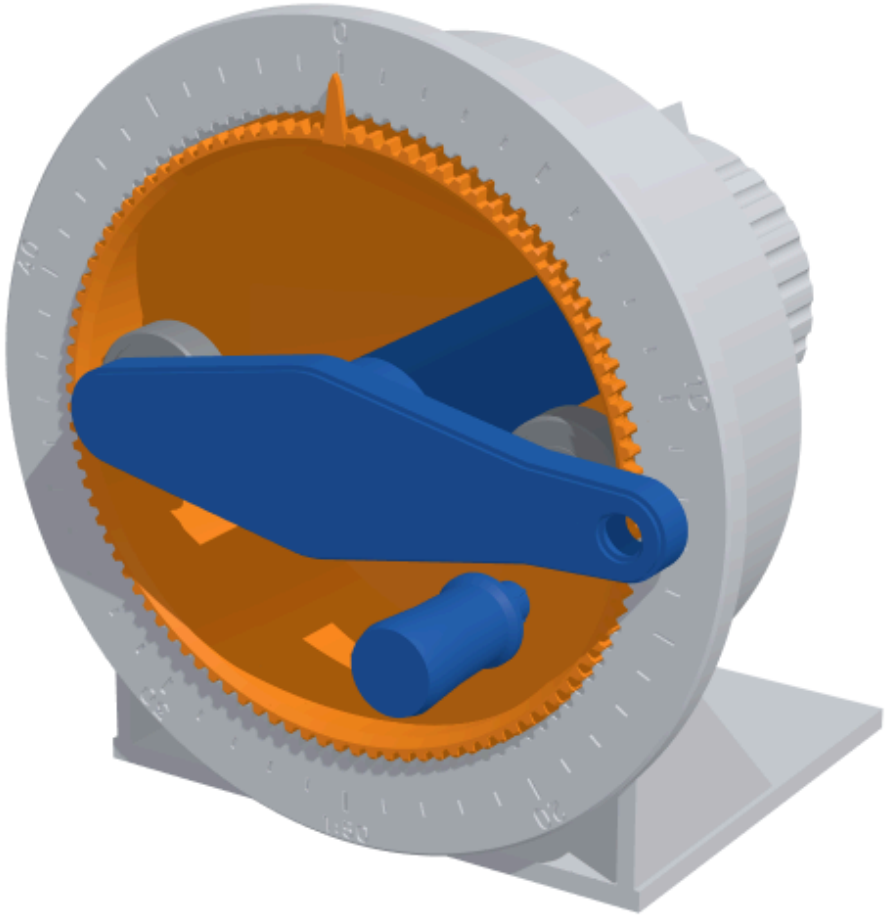

5 Handle

Press the handle's peg into the hole at the end of the crank bar. It is a press fit: tap it in if needed.

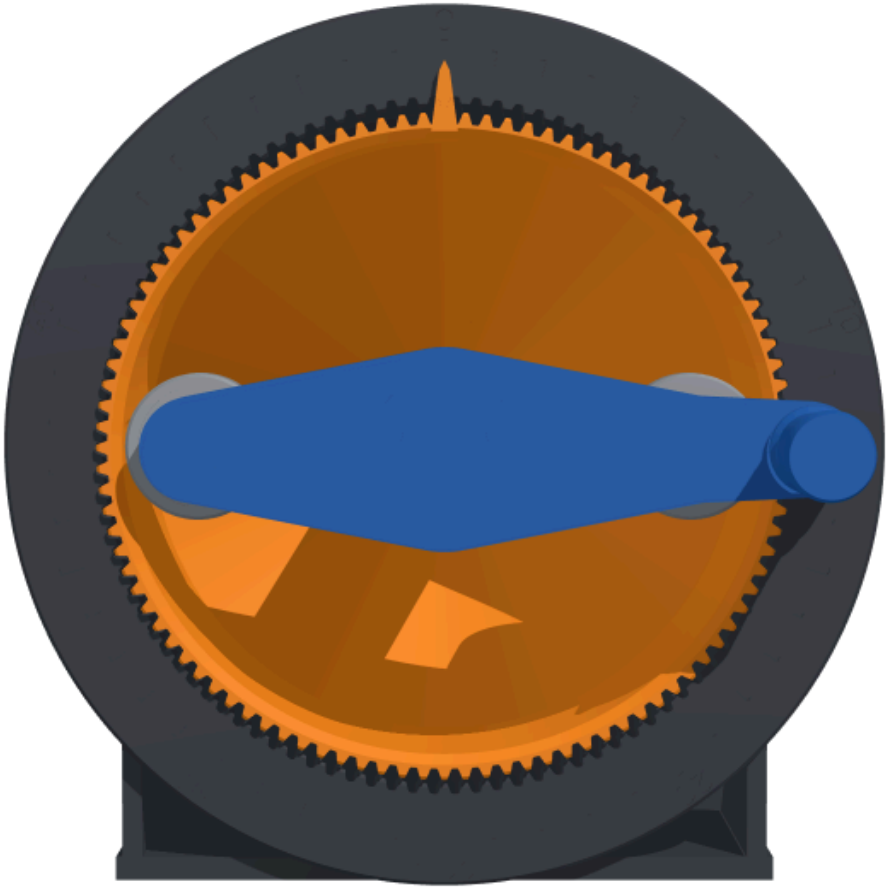

6 Turn it

Turn the crank. The pointer on the front of the cup moves one tick per turn, the other way round, and the knob at the back turns once for fifty turns of the crank. A drop of grease on the teeth makes it quieter.

Things to try, and when something is wrong

Things to try

Feel the ratio. Hold the knob with two fingers and turn the crank. Your fingers lose: every newton-centimetre at the crank is fifty at the knob.

Turn it backwards. Try turning the knob by hand. A harmonic drive can be driven from its output, but at 1:50 the crank has to turn fifty times faster, and you feel the friction of the whole gear multiplied.

Find the backlash. Turn the crank one way, then the other. For about 30° of crank the pointer stands still: that is the 0.2 mm of room round the teeth. Industrial drives have almost none.

Watch the wave. Look at the front of the cup while you turn slowly. The teeth go into the ring at the bearings and come free a quarter turn further: the wave runs round fifty times faster than the cup.

Count it. Mark a tooth of the cup and the space of the ring it sits in. After one crank turn it sits two spaces further back.

When something is wrong

What you notice	What to do
The crank is stiff or the gear clicks	Print generator-easy: its bearings sit 0.15 mm further in, so the cup is pushed out less. Check the teeth of the ring for blobs.
The pointer jumps a tooth now and then	The cup is not pushed out far enough: make sure both bearings sit fully on their spacers.
The cup won't go into the ring	Turn the crank to and fro while pushing; the teeth only go in at the two ends of the bar.
The knob is loose	The prongs have not clicked out behind it: push the knob on until it clicks.
It squeaks	A little grease on the teeth and on the shaft.

This model has not been test-printed yet: the fits, the bending and the forces in this book are calculated. Don't crank it against a blocked output: at 1:50 a firm push on the handle can break teeth.