BUILD GUIDE

1:1000 Gear Tower

12 000 rpm in at the bottom, 12 rpm out at the top

A 12 V 775 motor and four stages of helical gears: 10 printed parts, eight ball bearings, two threaded rods and a speed knob.

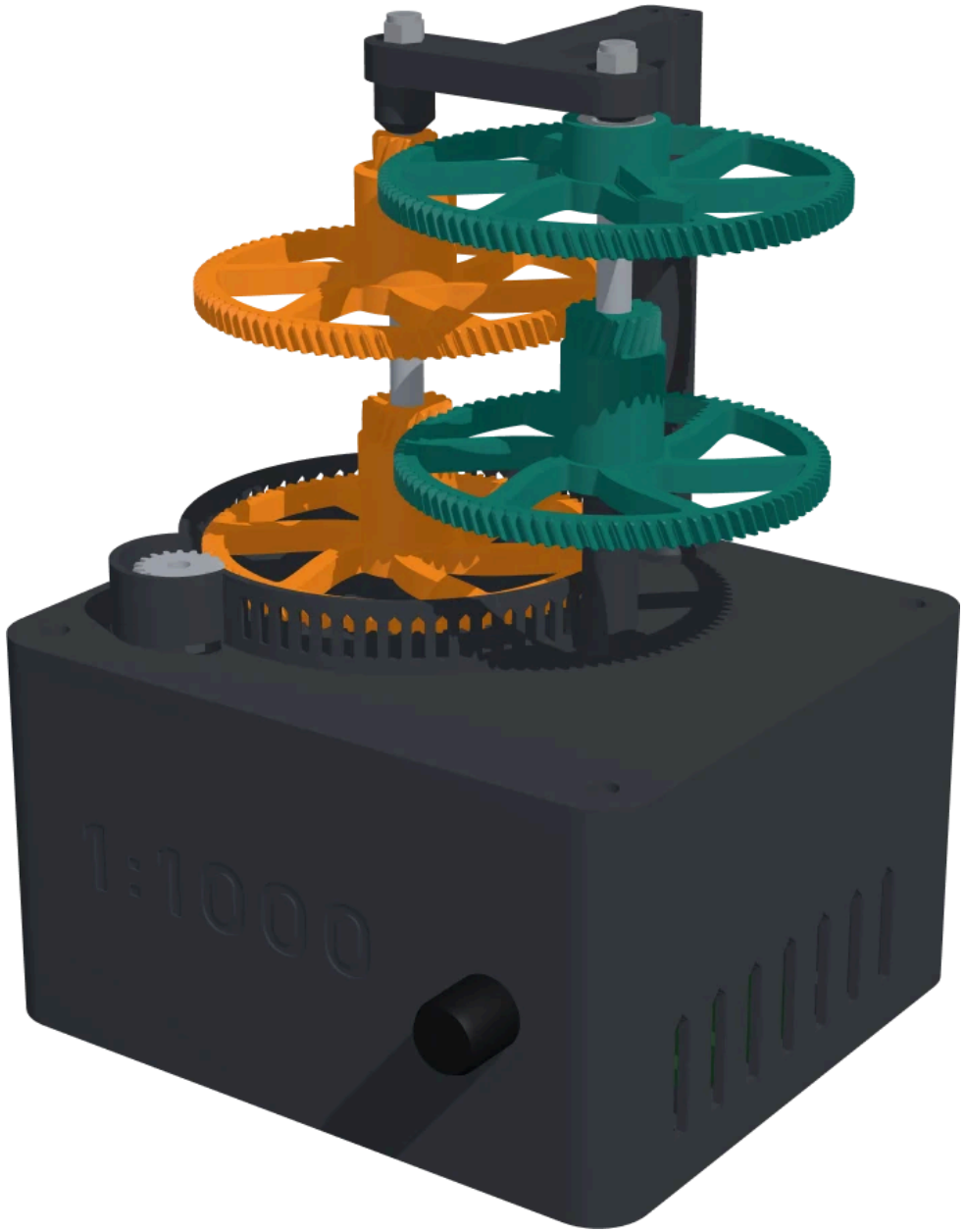

Before you start

A 775 motor sits in the base with its shaft up, and every gear above it is slower than the one before. The motor turns an 18-tooth pinion at up to 12 000 rpm. That drives a 90-tooth wheel, whose own 18-tooth pinion drives the next 90-tooth wheel one level up, and so on, zigzagging between two upright rods: 2 400, 480 and 96 rpm. The last stage is 12 to 96 teeth, and the big gear on top turns at 12 rpm, once in five seconds. 5 × 5 × 5 × 8 = 1000. At the bottom the gears are a blur behind a guard; at the top the pointer creeps round. Every gear runs on two 625 ball bearings on a fixed M5 threaded rod, and a knob on the front sets the speed.

Print settings

- **0.16 mm** layer height for the gears, 0.2 mm for the rest
- **3** walls (4 for the gears)
- **20%** gyroid infill
- **PLA or PETG** PETG for the motor pinion

Every STL already lies the right way up, and nothing needs supports. The three 3MF files in the download are ready plates for a 256 × 256 mm bed (Bambu Lab A1, P1S, X1).

How to read this guide

In the step pictures the parts you add in that step are in colour; parts fitted earlier are pale.

You need

- A 775 DC motor, 12 V, about 10 000 to 12 000 rpm with no load (the common one with a cooling fan and a 5 mm shaft). Slower 775 motors work too: the top gear then turns slower.
- A PWM motor speed controller for 12 V, at least 5 A, with its knob on a cable and an on/off switch in the knob (the knob's pot has an M7 thread).
- A 12 V power adapter, 3 A or more, with a 5.5 × 2.1 mm plug, and a panel-mount 5.5 × 2.1 mm DC jack (M8 thread).
- Eight 625ZZ ball bearings (5 × 16 × 5 mm).
- M5 threaded rod, 2 pieces of 136 mm, 2 M5 nuts and 2 M5 nyloc nuts.
- 2 × M4 × 6 screws for the motor, 4 × M3 × 10 screws for the deck, 2 × M3 × 16 for the arm, an M3 × 6 grub screw and an M3 nut.
- Hook-up wire (1 mm², red and black), heat-shrink, double-sided tape, and four rubber feet.
- A little PTFE or silicone grease for the gear teeth.

> **Safety.** The bottom gears spin fast and the motor is strong: at the top it pushes with up to a thousand times its own torque. Keep fingers and hair away from the gears while it runs, never stop a gear by hand, and turn the knob to zero before you switch on. Use a plug-in 12 V adapter, never mains power directly.

All parts at a glance



Every gear turns on two 625 bearings on a fixed M5 rod. A wheel on one rod is driven by the pinion of the gear one level below it on the other rod, so the train zigzags up the tower. All four stages run at 54 mm between the rods.

Part	Teeth	Sits on	Speed at 12 V
Motor pinion	18	775 motor shaft	12 000 rpm
Gear 1	90 → 18	rod A	2 400 rpm
Gear 2	90 → 18	rod B	480 rpm
Gear 3	90 → 12	rod A	96 rpm
Gear 4	96	rod B	12 rpm

$(90 / 18)^3 \times 96 / 12 = 5 \times 5 \times 5 \times 8 = 1000$. The speeds are for a motor that runs 12 000 rpm with no load; the knob turns the whole tower down.

Rods: 2 × 136 mm of M5 threaded rod. The tower is 215 mm tall on a 165 × 145 mm base.

Parts list



Box × 1

gear-tower-box.stl

The bottom of the base, 165 × 145 × 85 mm. The motor hangs inside it and the speed controller lies on its floor. Holes for the knob in the front and the 12 V jack in the back, air slots for the motor's fan in both sides, and 1:1000 cut into the front.

Print: Upright, open side up. No supports: the holes are teardrops and the slots end in a point.



Deck and post × 1

gear-tower-deck.stl

The top of the base. The motor screws to it from below with two M4 screws (slots for holes 25 to 29 mm apart), the two rods stand in it on M5 nuts in hex pockets, and the guard with its windows rings the motor pinion and the first gear. The post at the back carries the arm.

Print: Flat side down, post up. No supports. 104 mm tall.



Motor pinion × 1

gear-tower-motor-pinion.stl

18 teeth, on the 775's 5 mm shaft. An M3 grub screw from the side holds it; its nut goes in a slot from below. At full speed this is 12 000 rpm.

Print: Hub down. Print it in PETG if you have it.

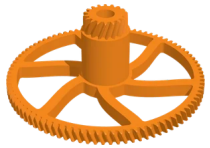

Gear 1 × 1

gear-tower-gear-1.stl

90-tooth wheel on rod A, driven by the motor pinion, with its 18-tooth pinion 24 mm higher. Two 625 bearings press into the hub from below: the first one all the way up to its stop under the pinion, the second one flush with the bottom. 2 400 rpm.

Print: Wheel down. No supports.

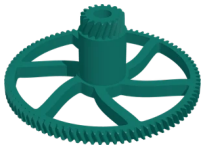

Gear 2 × 1

gear-tower-gear-2.stl

The same gear on rod B, one level up: 480 rpm.

Print: Wheel down. No supports.

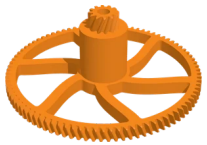

Gear 3 × 1

gear-tower-gear-3.stl

90-tooth wheel on rod A again, but with a 12-tooth pinion for the last stage (profile shifted, so it fits the same 54 mm between the rods). 96 rpm.

Print: Wheel down. No supports.



Gear 4 (output) × 1

gear-tower-gear-4.stl

96 teeth, on top of rod B, with a raised pointer: 12 rpm, one turn in five seconds. Two 625 bearings in its hub.

Print: Wheel down, pointer up.



Arm × 1

gear-tower-arm.stl

The T-shaped arm that screws onto the post and holds the tops of both rods in line.

Print: Upside down, as the file lies. No supports.



Spacer × 2

gear-tower-spacer.stl

A short tube on the rod between two gears. It presses only on the inner rings of the bearings.

Print: Standing up.

Wiring

1:1000 Gear Tower: wiring

Everything sits inside the box. Red is +12 V, black is ground. Use 1 mm² wire (18 AWG).

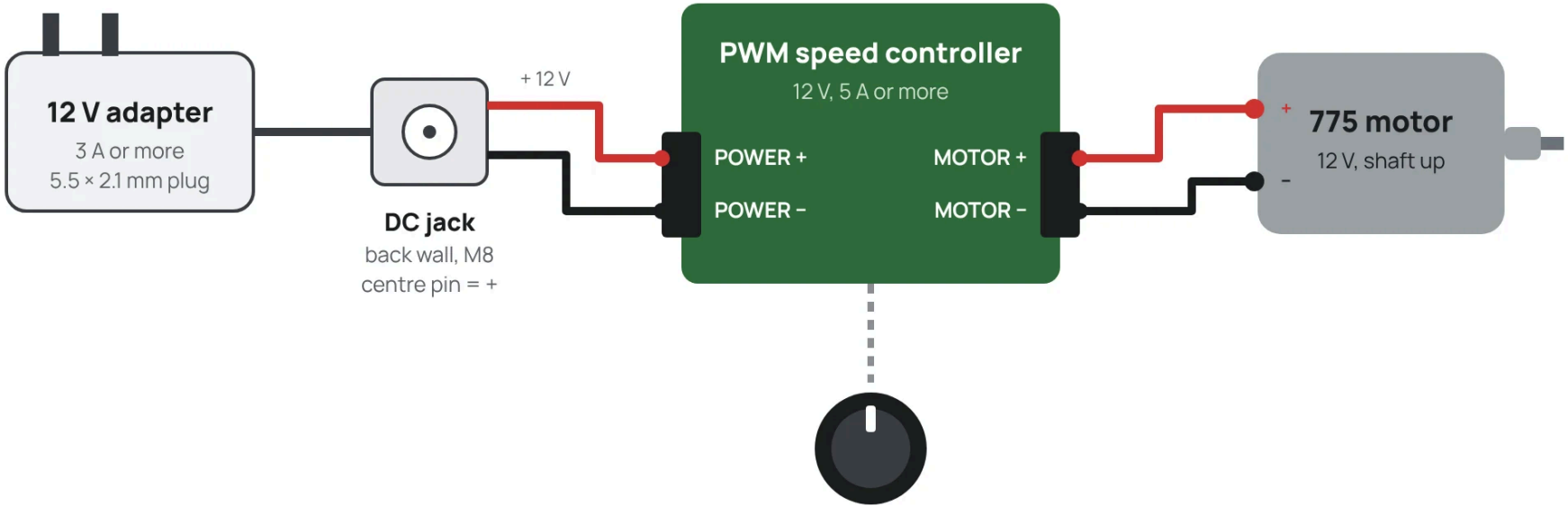

- Solder the motor wires to its two tabs before you screw it to the deck. Swapping them only changes which way the gears turn.
- A 100 nF ceramic capacitor across the motor tabs cuts the electrical noise of the brushes (optional).
- Never run the motor straight from the adapter: start with the knob at zero and turn it up slowly.

1 Print and clean up

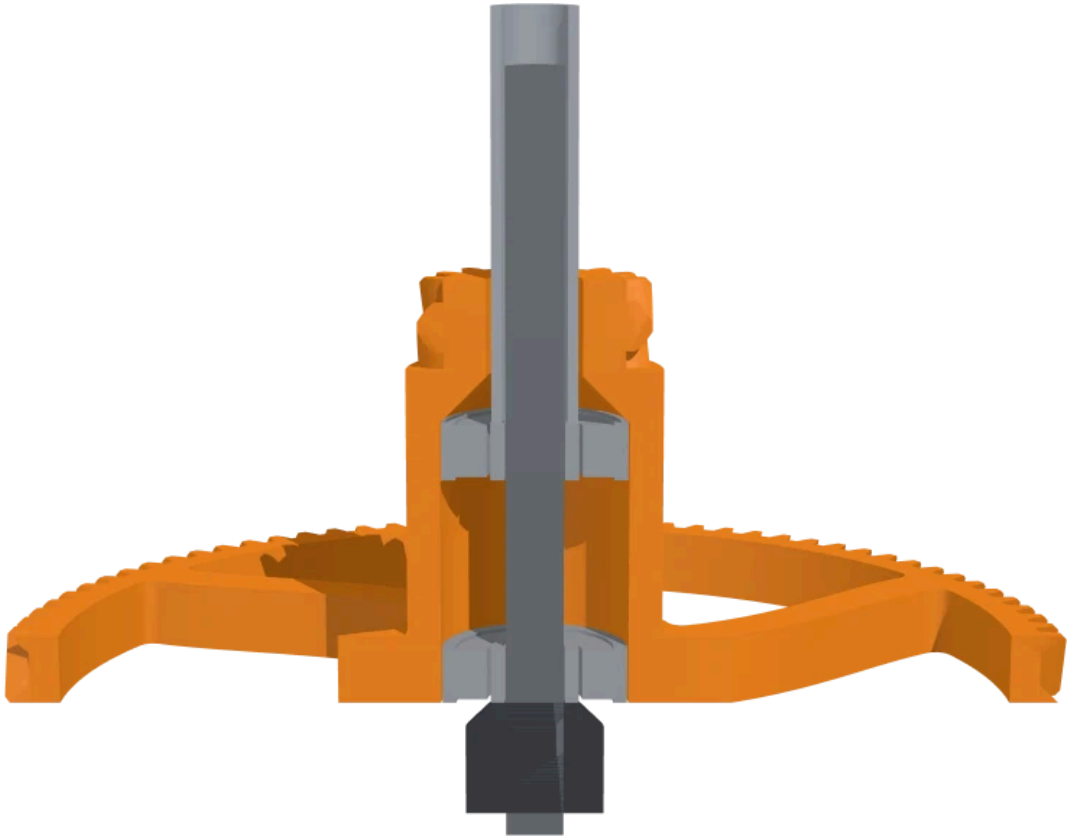

Print the ten parts and check that the teeth are clean. Press two 625 bearings into each gear: in gears 1 to 3 both go in from below, the first one all the way up to its stop and the second flush with the bottom; in gear 4 one from each side. A vice, or an M5 bolt with two washers and a nut, pushes them in straight. The picture shows gear 1 cut in half: both bearings sit in the tube under the pinion, nothing sticks out above it, and the spacer reaches up through the pinion to the next gear on the rod.

2 Wire the base



Screw the panel jack into the back of the box and the knob of the speed controller into the front. Stick the controller board to the floor with double-sided tape. Wire the jack to the controller's power input and the controller's motor output to the motor, as in the wiring diagram.

3 Motor on the deck



Hold the motor under the deck with its shaft up through the big hole and screw it on with the two M4 × 6 screws from above. Push the motor pinion onto the shaft until its hub nearly touches the deck, slide an M3 nut into the slot from below and tighten the grub screw on the flat of the shaft.

4 Rods, gear 1 and gear 2



Push an M5 nut into each hex pocket under the deck and screw the two rods into them from above. Slide gear 1 down rod A (next to the motor): the teeth are helical, so it turns a little as it slides into mesh with the pinion. Then gear 2 down rod B, into mesh with the pinion of gear 1. Spin gear 1 by hand: everything turns.

5 Spacers, gear 3 and gear 4

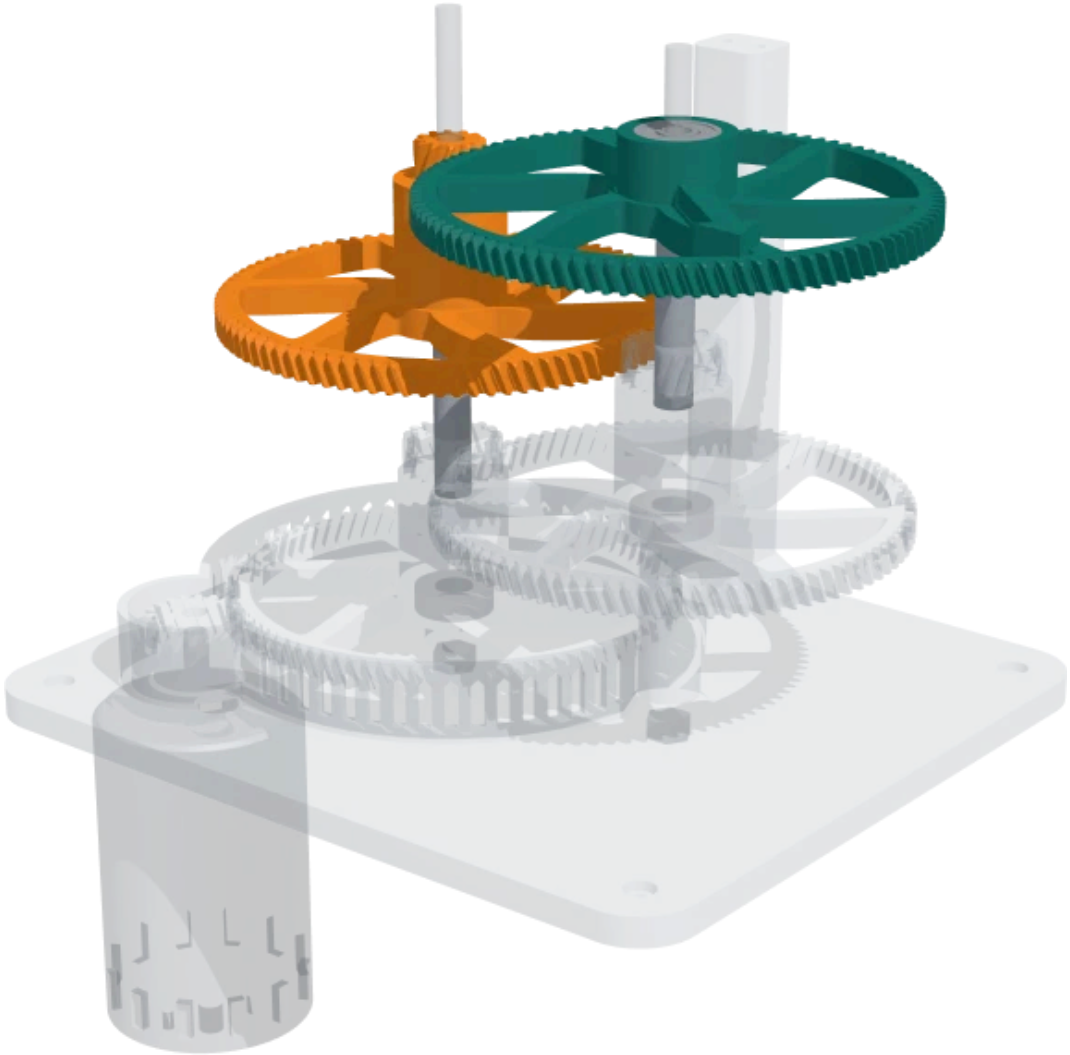

A spacer down rod A: it goes through the pinion of gear 1 and stands on its upper bearing. Gear 3 down rod A into mesh with gear 2, the second spacer down rod B, and gear 4 on top of rod B. Turn the motor pinion with a finger and watch the train: gear 4 hardly moves.

6 Arm and box

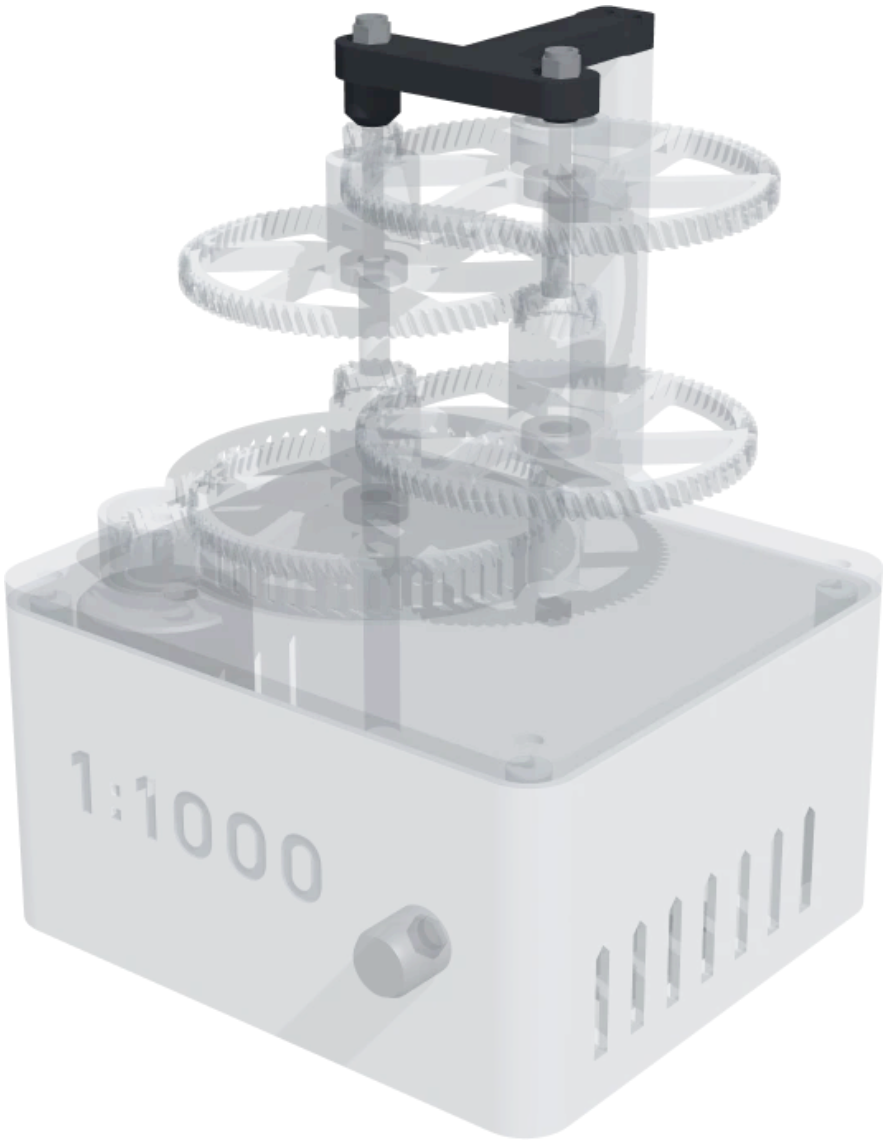

Put the arm over both rods and screw it to the post with the two M3 × 16 screws, then put a nyloc nut on each rod, just snug: the gears must still spin freely. Set the deck on the box and screw it down at the four corners. Stick on the rubber feet. Put a little grease on the teeth. Turn the knob to zero, plug in the adapter, switch on and turn the knob up slowly. Let it run in for a few minutes at low speed before you go to full speed.

Running it

Put a little grease on the teeth. Turn the knob to zero, plug in the adapter, switch on with the knob and turn it up slowly. Let it run at low speed for a few minutes so the teeth wear in, then go faster. The top gear is the one to watch: at full speed it turns once in five seconds while the motor below it turns a thousand times.

> **Safety.** The bottom gears spin fast and the motor is strong: at the top it pushes with up to a thousand times its own torque. Keep fingers and hair away from the gears while it runs, never stop a gear by hand, and turn the knob to zero before you switch on. Use a plug-in 12 V adapter, never mains power directly.

It buzzes but does not turn

Turn the knob up further: a PWM controller needs some duty before the motor starts. If it still does not start, check that no gear rubs on the guard or the arm, and that the nyloc nuts are not too tight.

A gear clicks once per turn

One tooth has a blob or a string on it. Find it with the knob at its slowest and clean it with a knife.

It is loud at full speed

The first stage runs at thousands of rpm. A little PTFE or silicone grease on the teeth quietens it; so does PETG for the motor pinion. Most of the show is at a medium speed anyway.

A gear wobbles

Its bearings are not pushed in straight. Press them out with the rod and a nut and press them in again.

The motor gets hot

Normal at full speed for a long time. Give it a break, and keep the air slots in the box free.